THIS DRAWING IS UNPUBLISHED. RELEASED FOR PUBLICATION - , - .
© COPYRIGHT - BY TYCO ELECTRONICS CORPORATION. ALL RIGHTS RESERVED.

LOC	DIST
AA	00

REVISIONS

P	LTR	DESCRIPTION	DATE	DWN	APVD
	E	ECO-07-022131	03NOV07	LAM	JW
	E1	REVISED PER ECO-09-021826	12SEP09	KK	AEG

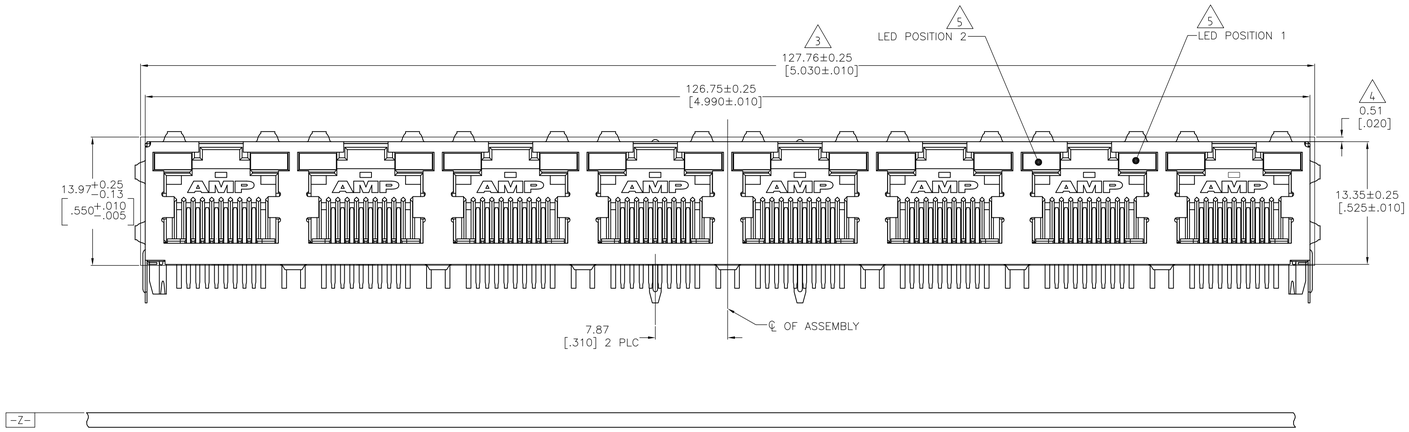

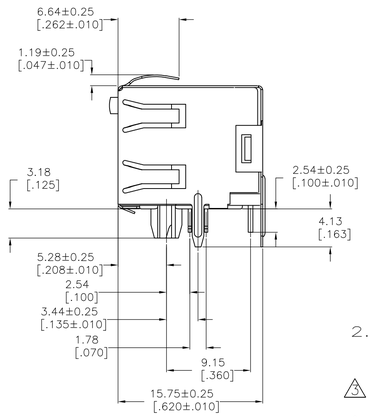

1. MATERIAL:
HOUSING – HIGH TEMPERATURE THERMOPLASTIC, COLOR: BLACK, UL94V-0
TERMINALS – 0.36[.014] THICK PHOS BRONZE PLATED WITH 3.81µm[.000150] MIN THICK BRIGHT TIN LEAD IN SOLDER AREA, 1.27µm[.000050] MIN GOLD IN LOCALIZED PLATE AREA. ENTIRE TERMINAL PLATED WITH 1.27µm[.000050] MIN THICK NICKEL.
SHIELD – 0.196[.0077] THICK COPPER ZINC ALLOY PREPLATED WITH 1.27µm[.000050] MIN SATIN NICKEL WITH 2.03µm[.000080] MIN TIN POST DIPPED ON PCB GROUND TABS
LIGHT EMITTING DIODE (LED) – DIFFUSED EPOXY LENS, 0.51 X 0.51[.020 X .020] CARBON STEEL WIREFRAME LEADS PLATED WITH 8.89µm[.000350] TIN/COPPER OVER 2.03µm[.000080] SILVER OVER 1.02µm[.000040] NICKEL UNDERPLATE OVER 2.03µm[.000080] COPPER UNDERPLATE

2. JACK CAVITY CONFORMS TO FCC RULES AND REGULATIIONS PART 68, SUBPART F.

3. SUGGESTED PANEL OPENING DIMENSIONS.

4. SUGGESTED CLEARANCE BETWEEN TOP OF CONNECTOR AND TOP PANEL OPENING.

5. SEE TABLE FOR COLOR OF LEDS AND NUMBER REQUIRED.

6. THIS MODULAR JACK WITH INTEGRATED LED IS NOT IR REFLOW SOLDERING PROCESS COMPATIBLE.

7. OBSOLETE PARTS: OBSOLETE CIS STREAMLINING PER D.RENAUD/D.SINISI

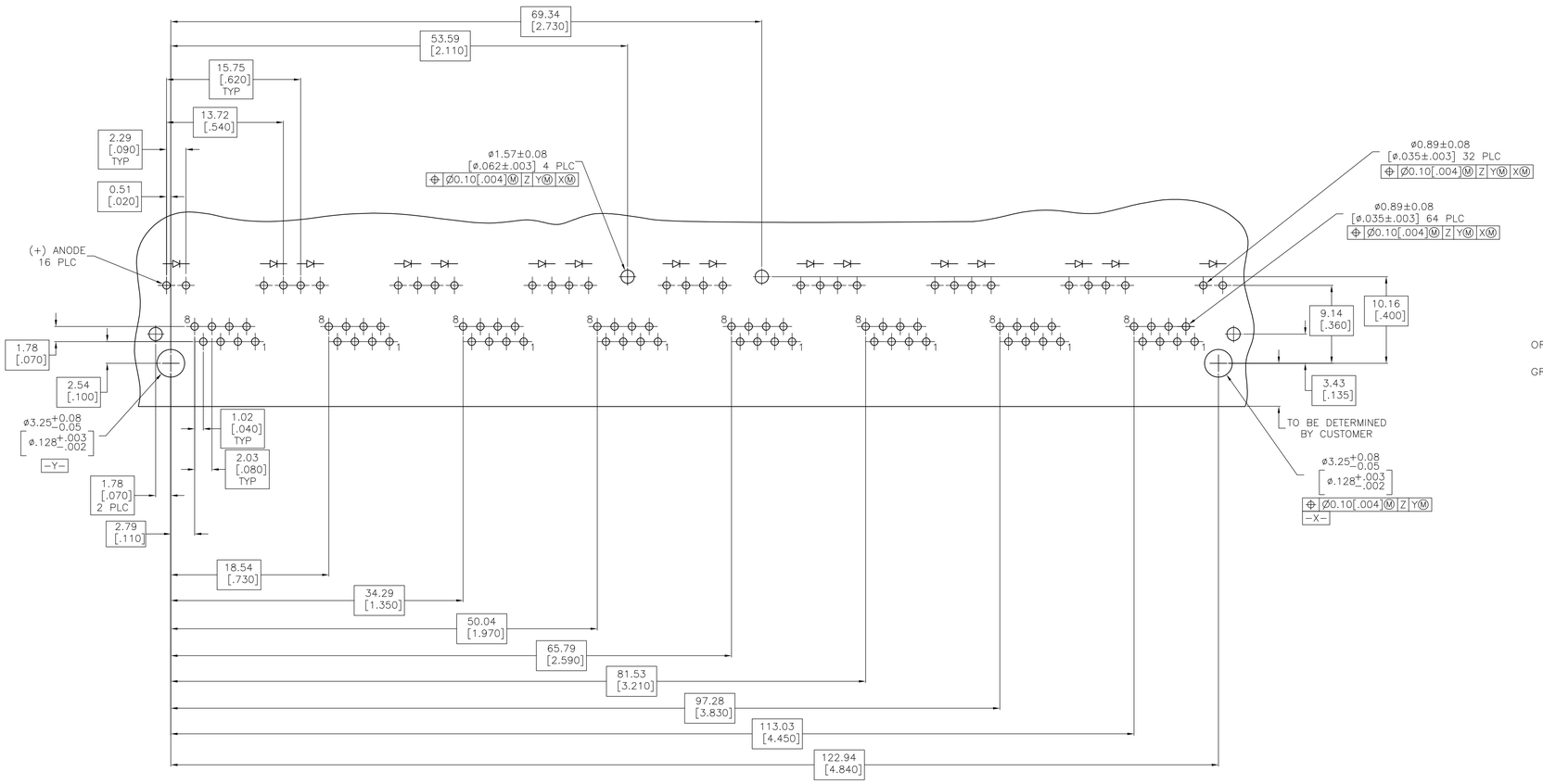

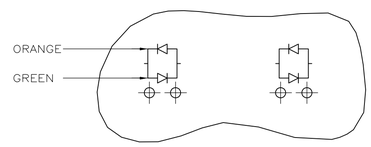

LED CURRENT DIAGRAM
406967-7 ONLY

7 OBSOLETE	ORANGE/GREEN	ORANGE/GREEN	~~406967-7~~
	YELLOW	YELLOW	~~406967-6~~
	GREEN	GREEN	406967-5
SUPERCEDED BY 5406967-4	GREEN	YELLOW	~~406967-4~~
	YELLOW	–	406967-3
7 OBSOLETE	–	GREEN	~~406967-2~~
	YELLOW	GREEN	~~406967-1~~
	POSITION 2	POSITION 1	PART NUMBER
	INDICATOR COLOR FOR EACH HOUSING		

THIS DRAWING IS A CONTROLLED DOCUMENT.

DIMENSIONS: mm [INCHES]

TOLERANCES UNLESS OTHERWISE SPECIFIED:
0 PLC ± –
1 PLC ± –
2 PLC ± 0.25[.01]
3 PLC ± 0.13[.005]
4 PLC ± –
ANGLES ± –

MATERIAL: SEE NOTE 1
FINISH: SEE NOTE 1

DWN T. WOOTEN 22SEP97
CHK T. SPRINKLE 22SEP97
APVD M. DERSTINE 22SEP97
PRODUCT SPEC 108-1163-4
APPLICATION SPEC 114-2154
WEIGHT –

Tyco Electronics
Tyco Electronics Corporation
Harrisburg, PA 17105-3608

NAME: INVERTED MODULAR JACK ASSEMBLY, 1X8, SHIELDED, BOTTOM TAB, PANEL GROUND, LED

SIZE	CAGE CODE	DRAWING NO	RESTRICTED TO
A1	00779	C-406967	–

CUSTOMER DRAWING | SCALE 3:1 | SHEET 1 OF 1 | REV E1