THIS COPY IS PROVIDED ON A RESTRICTED BASIS AND IS NOT TO BE USED IN ANY WAY DETRIMENTAL TO THE INTERESTS OF PANDUIT CORP.

PANDUIT PART NUMBER	STUD SIZE	DIMENSIONS - in.					TOOLS
		A ± .03	W ± .01	C ± .02	M ± .03	H ± .01	
PV6-8RX	#8	1.61 (40.89)	.47 (11.94)	.43 (10.92)	1.37 (34.8)	.17 (4.32)	CT-720 (CD-720PV8-2) CT-2600 (CD-2600-PV6)
PV6-10RX	#10	1.61 (40.89)	.47 (11.94)	.43 (10.92)	1.37 (34.8)	.20 (5.08)	
PV6-14RX	1/4"	1.61 (40.89)	.47 (11.94)	.43 (10.92)	1.37 (34.8)	.27 (6.86)	
PV6-56RX	5/16"	1.73 (43.94)	.62 (15.75)	.51 (12.95)	1.42 (36.07)	.33 (8.38)	
PV6-38RX	3/8"	1.73 (43.94)	.62 (15.75)	.53 (13.46)	1.42 (36.07)	.39 (9.91)	
RV6-12RX	1/2"	1.83 (46.48)	.82 (20.83)	.53 (13.46)	1.42 (36.07)	.52 (13.21)	

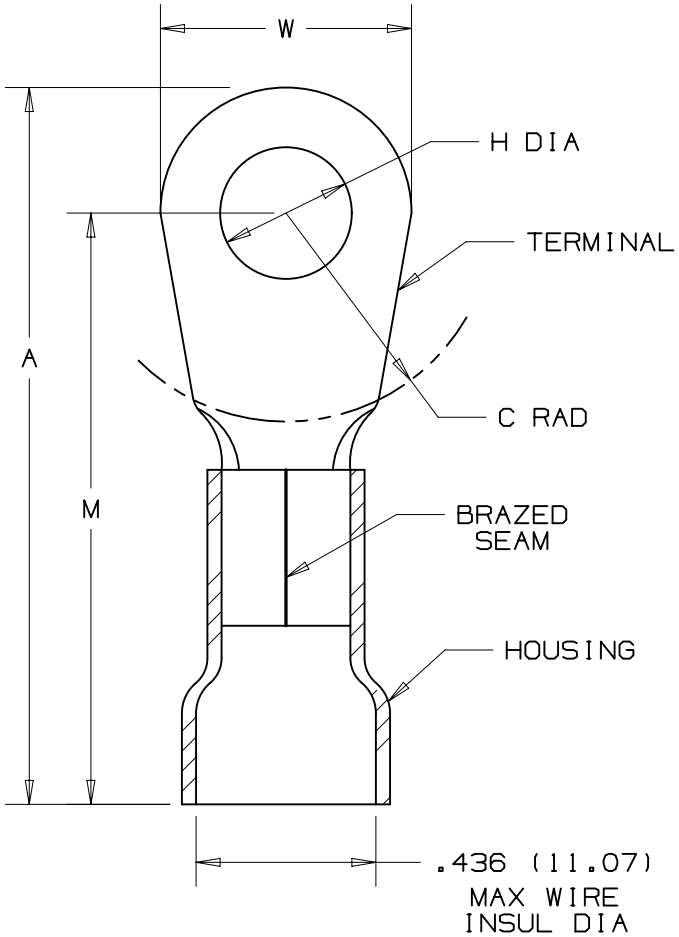

NOTES:

1. cULus LISTED FOR:
   A. 600V MAX VOLTAGE RATING
   B. 221° F (105° C) MAX TEMP RATING
   C. #6 AWG STRANDED COPPER WIRE
2. SEE WWW.PANDUIT.COM FOR PACKAGE QUANTITIES
3. MATERIAL:
   A. STAMPING - .045" (1.14) THK, COPPER TIN PLATED
   B. HOUSING - VINYL, BLUE
4. DIMENSIONS IN BRACKETS ARE IN MILLIMETERS
5. WIRE STRIP LENGTH: 7/16 + 1/32 (11.1 + .8) - 0 - 0

c UL us
LISTED
587H
E52164

REV	DATE	BY	CHK	APR	DESCRIPTION	ECN
05	06/14	MBY	JHNU	RGB	REVISED UL LOGO TO cULus LOGO, REVISED NOTES, MOVED TOOLS TO TABLE, UPDATED BORDER	N41222BB-A41222

TITLE
#6 BARREL VINYL INSULATED RING TONGUE .436 [11.07] MAX. WIRE INSUL. DIAMETER

CUSTOMER DRAWING

ITEM REVISION NAME: N41222BB/05

DATASET FILE NAME: N41222BB/05

PANDUIT

UNLESS OTHERWISE SPECIFIED, DIMENSIONAL TOLERANCES ARE: IN [mm]

.X ± .XXX ±
.XX ± ANGLES ±

THIRD ANGLE PROJECTION

MATERIAL: SEE NOTE 3

DRAWING NUMBER: A41222

DRAWN BY	DATE	CHK	SCALE	SHT 1 OF 1	SIZE
DAW			NONE		A

D10100DA/16