Han® M12 RJ45

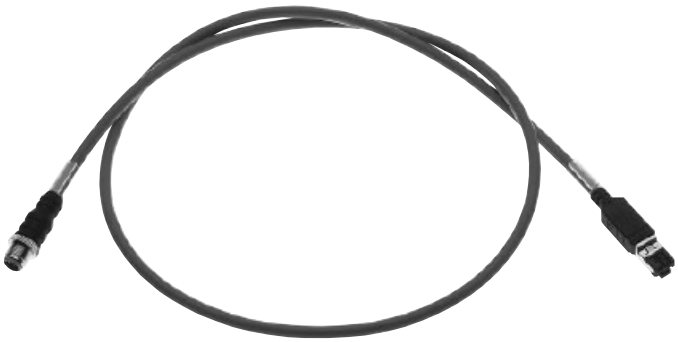

Identification	Part No.	Drawing	Dimensions in mm

Han® M12 to RJ45 (IP20), overmoulded
System cable, D-coding, 4-wire
AWG 22/7
trailing PUR

double ended

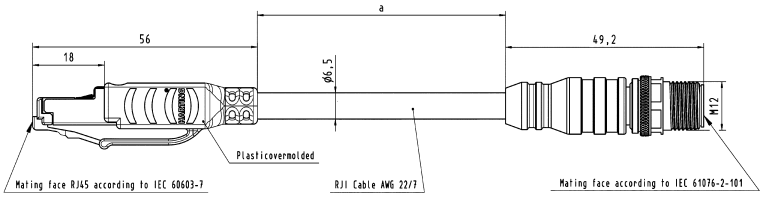

a = length

Length: a = 1.5 m	09 45 700 5023
a = 3.0 m	09 45 700 5025
a = 5.0 m	09 45 700 5027
a = 10.0 m	09 45 700 5051
a = 20.0 m	09 45 700 5053

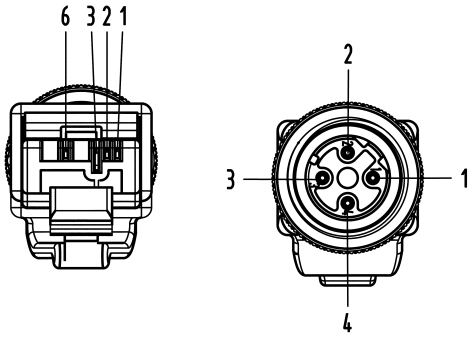

Han® M12 to RJ45, overmoulded
System cable, D-coding, 4-wire
AWG 22/7
stranded PVC outdoor

Length: a = 1.5 m	09 45 700 5064
a = 3.0 m	09 45 700 5066
a = 5.0 m	09 45 700 5068
a = 10.0 m	09 45 700 5073
a = 20.0 m	09 45 700 5075

Contact assignment

Signal	M12 D-coding	RJ45
TD+	1	1
TD–	3	2
RD+	2	3
RD–	4	6

Further cable lengths are available on request